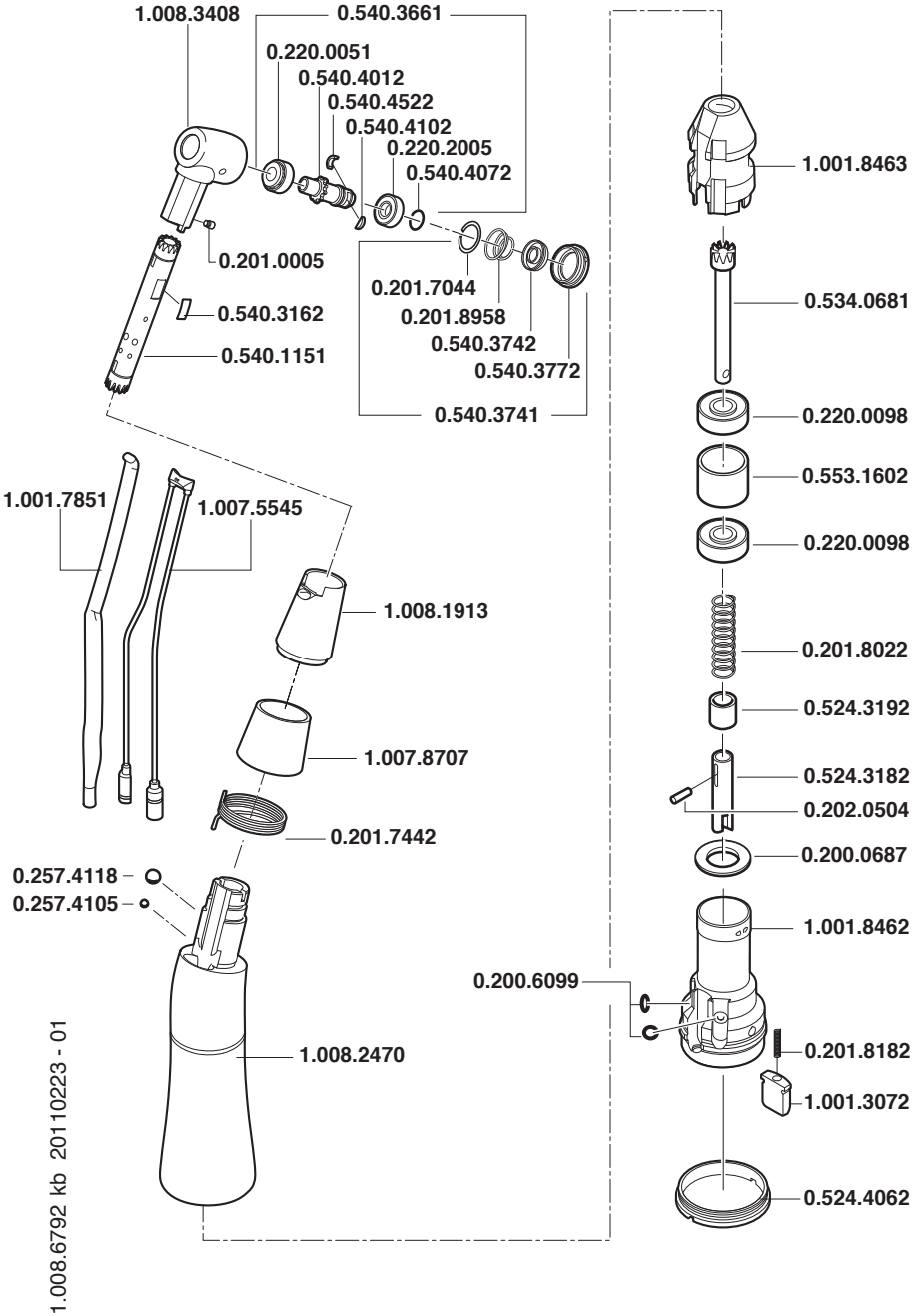

02/11 | Verk.-Nr. EXPERTmatic LUX E20 L
Mat.-Nr. 1.007.5540 | KaVo. Dental Excellence.

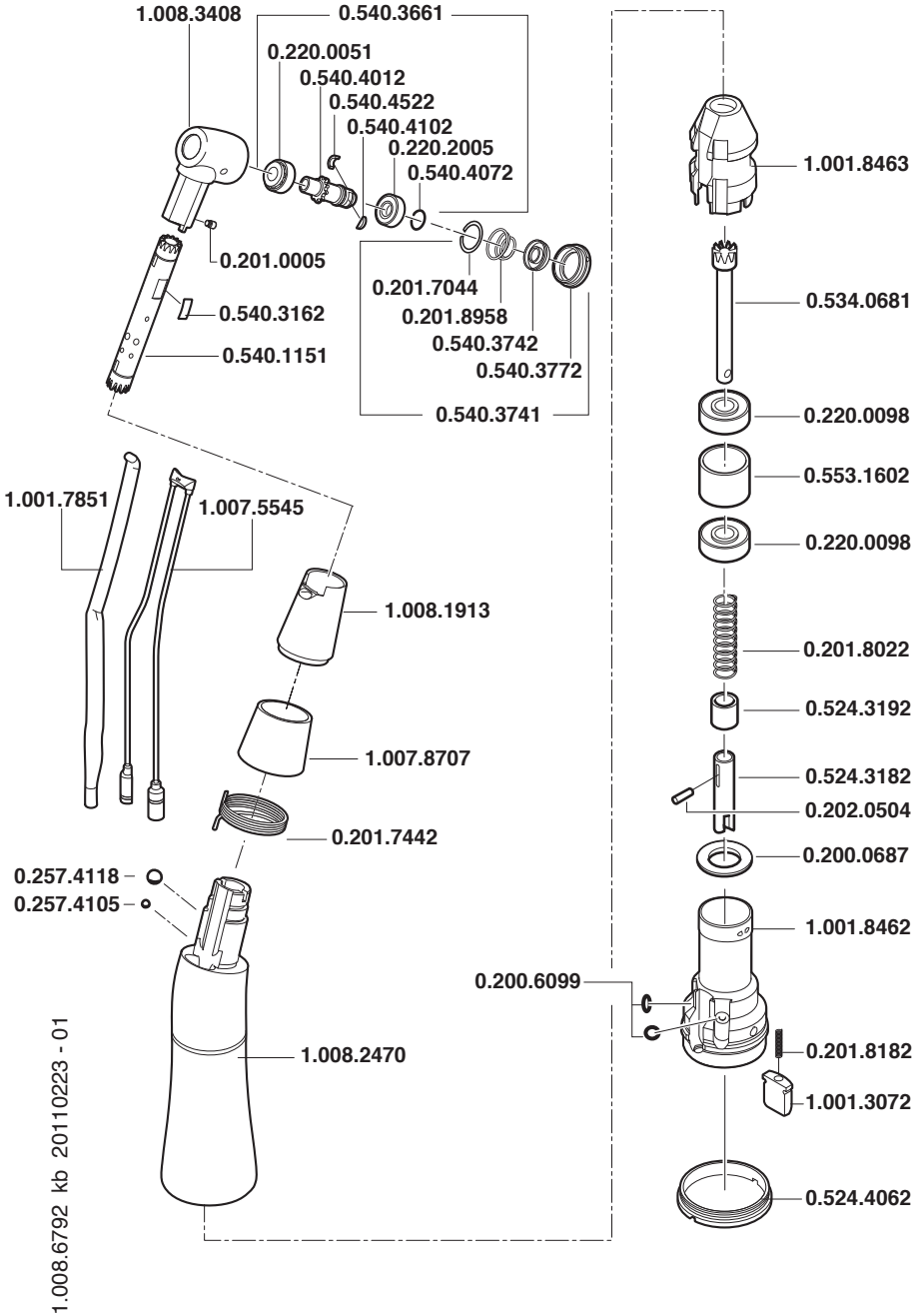

A 8.40